TEMPLATE & INSTRUCTIONS FOR VISOR ASSEMBLY

BiB OPHTHALMIC INSTRUMENTS

POSITION FOAM STRIP HERE

1 Fold both arms over, making sure the 8 slots are on the left hand side.

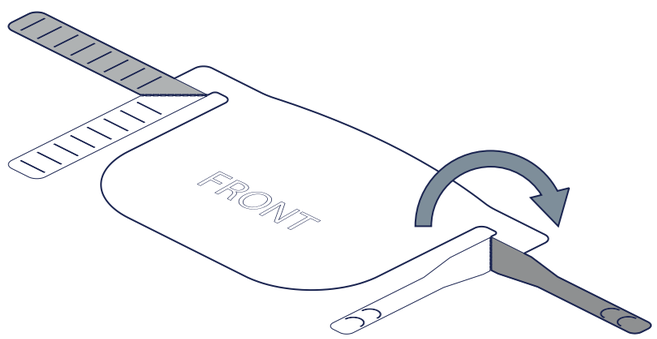

2 Turn visor over and line up with template, peel off adhesive backing from foam and stick to the visor.

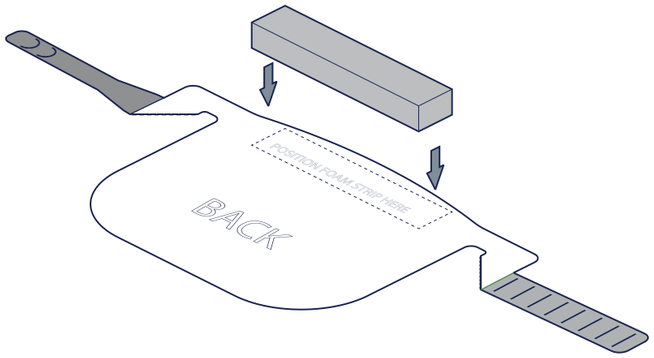

3 Feed locking strap through first slot.

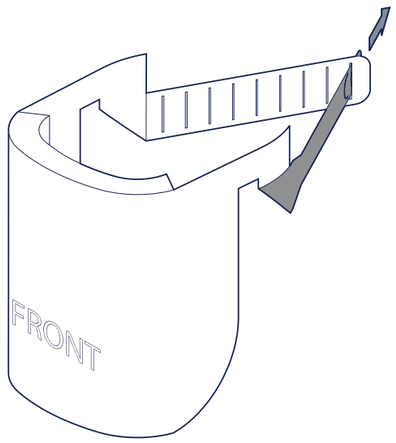

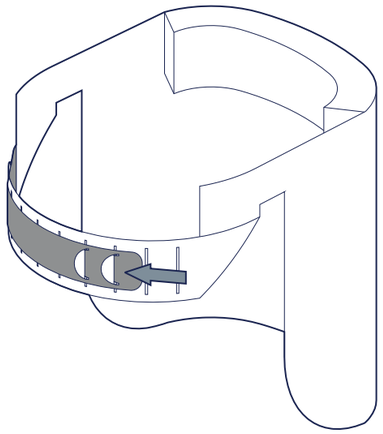

4 Adjust, lock and position over your head.